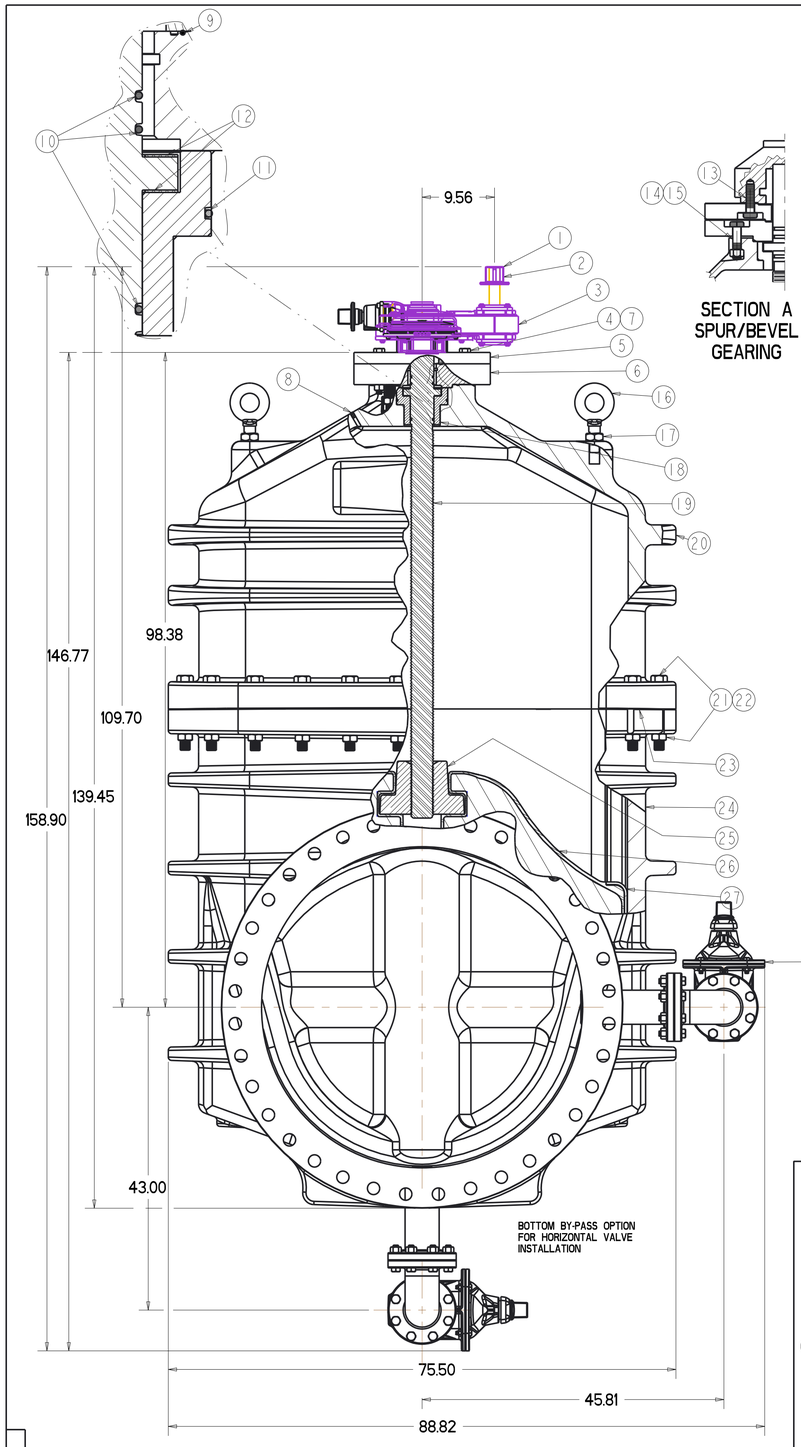

SECTION A-A

SECTION A
SPUR/BEVEL GEARING

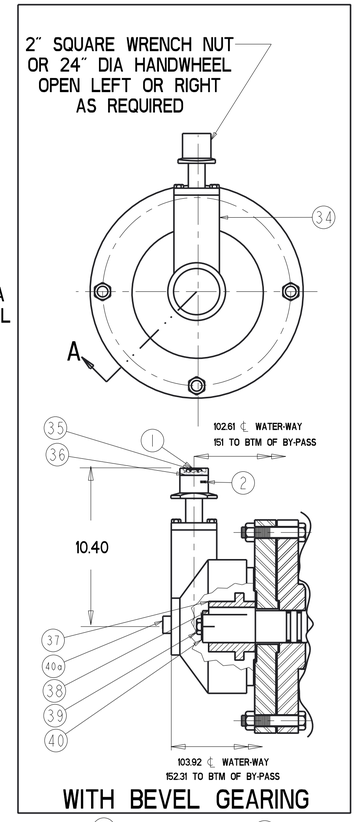

WITH BEVEL GEARING

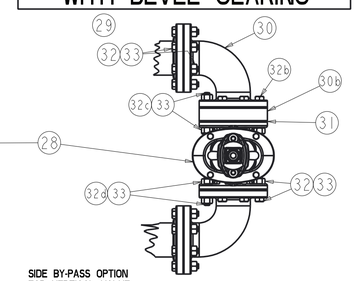

WITH BY-PASS

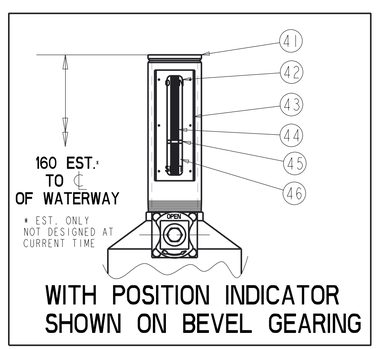

WITH POSITION INDICATOR SHOWN ON BEVEL GEARING

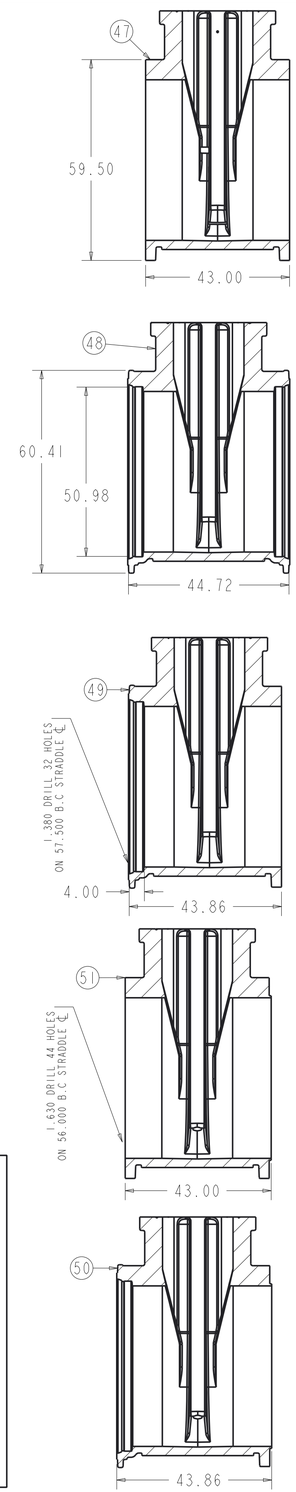

PART LIST 48" RWGV ASSEMBLY WITH SPUR GEAR OPERATOR SHOWN 19300± lbs (±approx.)

ITEM	DESCRIPTION	REQ'D	MATERIAL	ASTM	
1	WRENCH NUT OPEN LEFT	1	CAST IRON	A126	CLASS B
2	SET SCREW	1	STEEL		
3	SPUR GEAR IS7	1			ROTORK
4	HEX BOLT 3/4" x 6.00"	4	STEEL		SEE NOTE 3
5	ADAPTER	1	HOT ROLLED STEEL	A36	
6	STUFFING BOX w/SPUR GEAR	1	HOT ROLLED STEEL	A36	
7	HEX NUT 3/4"	4	STEEL		SEE NOTE 3
8	SQ. HEAD PIPE PLUG 1/4-18NPT	1	316 S. STEEL		
9	O-RING 5 1/8"x5 3/8"x 1/8" #251	1	RUBBER	D2000	EPDM
10	O-RING 3 3/8" x 3 3/4" x 3/16" #340	3	RUBBER	D2000	EPDM
11	O-RING 6 1/4"x6 5/8"x 3/16" #362	1	RUBBER	D2000	EPDM
12	ANTI-FRICTION (THRUST) WASHER	2	BRASS		HARD CDA260
13	SOCKET HEAD BOLT 3/4"x2 1/4"-BEVEL GEAR SOCKET HEAD BOLT 3/4"x1 1/2"-SPUR GEAR	4 4	316 STAINLESS 316 STAINLESS	F593 F593	GROUP 2-CW GROUP 2-CW
14	SOCKET HEAD BOLT 1" x 5-1/2"	4	316 STAINLESS	F593	GROUP 2-CW
15	HEAVY HEX NUT 1"	4	316 STAINLESS	F594	GROUP 2-CW
16	EYEBOLT 1 1/2"	2	STEEL		GALVANIZED
17	HEX NUT 1 1/2"	2	STEEL		SEE NOTE 3
18	BONNET BUSHING	1	BRONZE	B62	
19	STEM	1	BRONZE		SEE NOTE 1
20	BONNET	1	DUCTILE IRON	A536	
21	HEX BOLT 1 1/4" x 9 1/2"	28	316 STAINLESS	F593	GROUP 2-CW
22	HEX NUT 1/1 1/4"	28	316 STAINLESS	F594	GROUP 2-CW
23	BONNET O-RING	1	RUBBER	D2000	EPDM
24	BODY	1	DUCTILE IRON	A536	
25	DISC NUT	1	BRONZE	B62	
26	ENCAPSULATED DISC	1	SEE NOTE 2		
27	GUIDE CAP	2	ACETAL		
34	BEVEL GEAR	1			ROTORK
35	HEX CAP SCREW METRIC 10mm x 1.5 x 30mm	1	316 STAINLESS		
36	WASHER	1	BRASS		
37	STEM NUT	1	BRASS		
38	KEY.5"x3"(USED WITH SPUR/BEVEL GEARING)	1	STEEL		
39	CAP SCREW 3/4" x 1" (SPUR/BEVEL)	1	316 STAINLESS	F593	GROUP 2-CW
40	HOLD DOWN WASHER (USE w/SPUR/BEVEL)	1	STEEL		SEE NOTE 3
40a	PIPE PLUG 3"	1			
	4" RWGV BY-PASS PART LIST 210±lbs (±approx.)				
28	BY-PASS VALVE ASSEMBLY	1			SEE NOTE 4
29	PIPE NIPPLE w/FLANGE	2	STEEL		
30	90° ELBOW - SHORT	2	STEEL		
30b	SPACER	1	STEEL		
31	FLANGE GASKET	5	RUBBER		
32	Ø3/4" HEX BOLT (SHORT)	22	316 STAINLESS		
32b	Ø3/4" HEX BOLT (LONG)	6	316 STAINLESS		
32c	Ø3/4" THREADED STUD (LONG)	2	316 STAINLESS		
32d	Ø3/4" THREADED STUD (SHORT)	2	316 STAINLESS		
33	HEX NUT 3/4"	36	316 STAINLESS		
	POSITION INDICATOR PART LIST				
41	HOUSING SUB ASSEMBLY	1	STEEL		
42	DECAL FOR POSITION INDICATOR	1			
43	WINDOW GASKET	1			
44	INDICATING STEM 42" RWGV OL	1	BRONZE		
45	POINTER POSITION INDICATOR OL	1	BRONZE		
46	WINDOW	1	PLEXIGLAS/LEXAN		
	BODY END CONFIGURATIONS				
47	FLANGE x FLANGE BODY	1	DUCTILE IRON	A536	
48	MECH. JOINT x MECH. JOINT BODY	1	DUCTILE IRON	A536	
49	FLANGE x MECH. JOINT	1	DUCTILE IRON	A536	
50	MECH. JOINT x FLANGE TAPPING BODY	1	DUCTILE IRON	A536	
51	FLANGE x FLANGE TAPPING BODY	1	DUCTILE IRON	A536	

NOTES:
1. BRONZE ASTM B584 ALLOY C86200
2. RUBBER ENCAPSULATED DUCTILE IRON DISC
   RUBBER - EPDM ASTM D2000
   DUCTILE IRON ASTM A536 GRADE 65-45-12
3. BOLTS - SAE J429 GRADE 2
   FASTENERS - PLATED TO ASTM F1941 CLASS Fe/Zn 12C
   NUTS - ASTM A563 GRADE B
4. BY- PASS VALVE
   4" RWGV - FLANGE ENDS
   BY-PASS VALVES ARE EQUIPPED WITH 2" SQUARE WRENCH NUTS
   OR HANDWHEELS OPEN LEFT OR RIGHT AS REQUIRED
5. TURNS TO OPEN SPUR/BEVEL (RATIO 4:1) 596
   TURNS TO OPEN BY-PASS 14

DR BY	AO	07/12/17	UNLESS OTHERWISE NOTED	THIRD ANGLE PROJECTION
CHKR	BB	07/12/17	BREAK CAST CORNER(S)	
ENGR	MS	07/12/17	BREAK MACH CORNER(S)	
MGR			TOLERANCES UNLESS OTHERWISE NOTED	PURCH. NO / FINISH ASSY
MFG			LINEAR ± / ANGULAR ±	REF. NO. / SCALE NONE
TOOL				STK. NO.
FDRY				
MAT'L NOTED				

C.B. NO.
PATT. NO.

UNITED STATES PIPE VALVE & HYDRANT DIVISION CHATTANOOGA TENNESSEE

DESCR. 48" RWGV 250-PSI AWWA C515 WITH 316 STAINLESS STEEL

NUMBER U536570-316

U536570-316

ECO 18863588

APPROVED
By Matthew Sliger at 3:43 pm, Oct 16, 2017

U.S. PIPE VALVE & HYDRANT DIVISION CONFIDENTIAL: TITLE TO AND OWNERSHIP OF THIS ENGINEERING DATA REMAINS IN U.S. PIPE V & H NO USE IS TO BE MADE OF THIS DATA EXCEPT AS SPECIFICALLY AUTHORIZED BY U.S. PIPE V & H ASSENT ON THE PART OF THE RECIPIENTS TO THESE CONDITIONS IS PRESUMED.